| REVISIONS | | | |
|---|---|---|---|
| REV. | DESCRIPTION | DATE | APPROVED |
| D | SEE DCN: 6691 | 1/8/2009 | EG |

## TABLE I

| PT5AV GEARS | | | POTENTIOMETER OPTIONS | | | |
|---|---|---|---|---|---|---|
| RANGE | POT GEAR | MAIN SHAFT GEAR | 500 Ω POT | 1K Ω POT | 5K Ω POT | 10K Ω POT |
| 10 | 9000440-0010 | 9678770-0054 | 500 Ω, 1 TURN 9083000-0052 | 1K Ω, 1 TURN 9083000-0025 | 5K Ω, 1 TURN 9080000-0001 | 10K Ω, 1 TURN 9083000-0003 |
| 15 | 9678770-0085 | 9678770-0043 | | | | |
| 20 | 9678770-0100 | 9000440-0006 | | | | |
| 25 | 9678770-0100 | 9000400-0034 | | | | |
| 30 | 9678770-0100 | 9000440-0031 | | | | |
| 40 | 9678770-0065 | 9000440-0009 | 500 Ω, 5 TURN 9085000-0004 | 1K Ω, 5 TURN 9085000-0011 | 5K Ω, 5 TURN 9085000-0013 | 10K Ω, 5 TURN 9085000-0001 |
| 50 | 9678770-0065 | 9000440-0007 | | | | |
| 60 | 9678770-0070 | 9000440-0039 | | | | |
| 80 | 9678770-0085 | 9000440-0024 | | | | |
| 100 | 9678770-0085 | 9000440-0033 | | | | |
| 125 | 9678770-0085 | 9678949-0026 | | | | |
| 150 | 9678770-0085 | 9678770-0043 | 500 Ω, 10 TURN 9085000-0003 | 1K Ω, 10 TURN 9085000-0006 | 5K Ω, 10 TURN 9085000-0010 | 10K Ω, 10 TURN 9085000-0002 |
| 200 | 9678770-0085 | 9000440-0033 | | | | |
| 250 | 9678770-0085 | 9678949-0026 | | | | |

△1 △2 FOR METAL GEARS ONLY.
FOR PLASTIC GEARS, APPLY 1 DROP OF
LOCTITE 425 TO THREADS OF GEAR.
INSERT SET SCREW AND TIGHTEN
1/4 - 1/2 TURN PAST INITIAL CONTACT.

4 BUILD PER PS-135 FOR DETAILS NOT SHOWN ON THIS DRAWING.

3 ORIENT GEARS AS SHOWN.

△2 USE LOCTITE 222.

△1 USE LOCTITE PRIMER 7649, ALLOW TO DRY.

**NOTES: UNLESS OTHERWISE SPECIFIED**

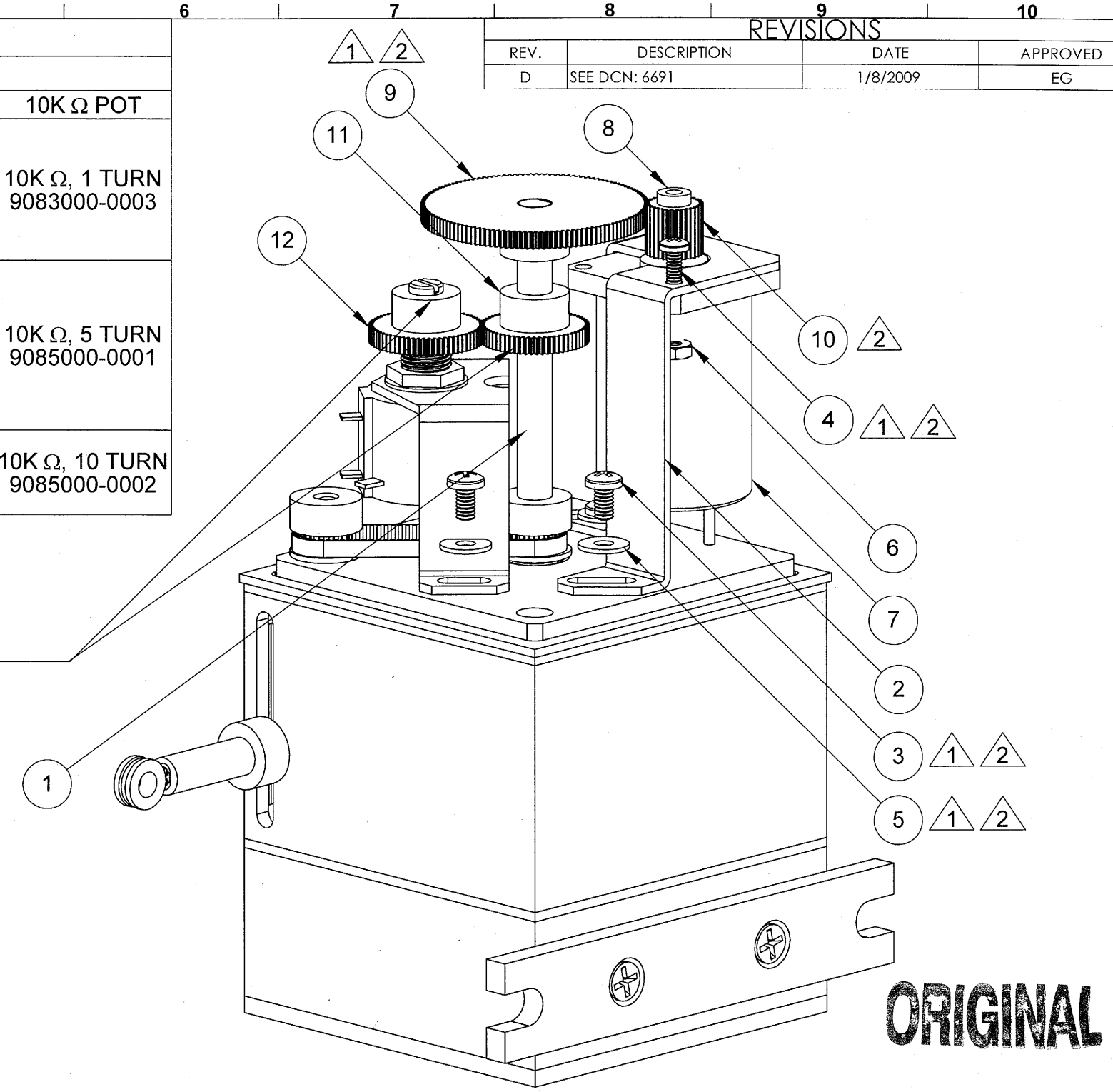


ORIGINAL

| ITEM NO. | PART NUMBER | DESCRIPTION | QTY. |
|---|---|---|---|
| 13 | SEE TABLE 1 | POTENTIOMETER OPTIONS, | 1 |
| 12 | SEE TABLE I | GEAR, POTENTIOMETER | 1 |
| 11 | SEE TABLE I | GEAR, MAIN SHAFT | 1 |
| 10 | 9000440-0033 | GEAR,80 PITCH, 32 TEETH,0.25 DIA | 1 |
| 9 | 9000440-0015 | GEAR,80 P, 130 TEETH, ∅.25 | 1 |
| 8 | 9673658-0000 | BUSHING,TACH,NYLN,0.12ID | 1 |
| 7 | 9000930-0001 | GENERATOR,DC 7V/1000 RPM | 1 |
| 6 | 9001221-4411 | NUT CRES #4-40 HEX | 2 |
| 5 | 9003101-6003 | WASHER,0.141X.375X.032THK | 2 |
| 4 | 9650444-0092 | MSCR,CRES,.112-40X.31 PNHD | 2 |
| 3 | 9007121-6305 | SCREW,CRES,.138-32 X .25 LONG,PAN HEAD | 2 |
| 2 | 9677828-0000 | BRACKET,TACH MOUNT,PT5AV | 1 |
| 1 | 9604028-0000 | SUBASSY,SHAFT,MAIN,PT5AV | 1 |

INFORMATION AND DATA SET FORTH HEREIN ARE DISCLOSED IN CONFIDENCE AND ARE PROPRIETARY TO AND THE PROPERTY OF CELESCO TRANSDUCER PRODUCTS INC. AND SHALL NOT BE USED, DUPLICATED, DISCLOSED OR TRANSFERRED, IN WHOLE OR IN PART, FOR ANY PURPOSE, WITHOUT THE EXPRESS PRIOR WRITTEN CONSENT OF CELESCO TRANSDUCER PRODUCTS INC.

THIRD ANGLE PROJECTION

celesco Transducer Products Inc.
20630 Plummer St
Chatsworth, CA. 91311
Tel:(818)701-2750 Fax:(818)701-2799
www.celesco.com

TITLE

**ASSEMBLY DRAWING PT5AV SERIES**

| APPROVALS | | DATE |
|---|---|---|
| DRAWN | A. ALVAREZ | 10/25/01 |
| CHKD | | 01/08/09 |

DO NOT SCALE DRAWING

| SIZE | CODE IDENT. NO | DWG. NO. | REV |
|---|---|---|---|
| B | 52158 | PS-60 | D |

SCALE: 1:1 SHEET 1 OF 3